PAULY

Fotoelektrik Pauly GmbH, Wahrbrink 6, 59368 Werne, Germany, Tel +49 2389 40227-70, Fax +49 2389 40227-77, www.fotoelektrik-pauly.de

Optical Anti-Collision Device Type PP1037/2*01
self-checking, without scanning behavior

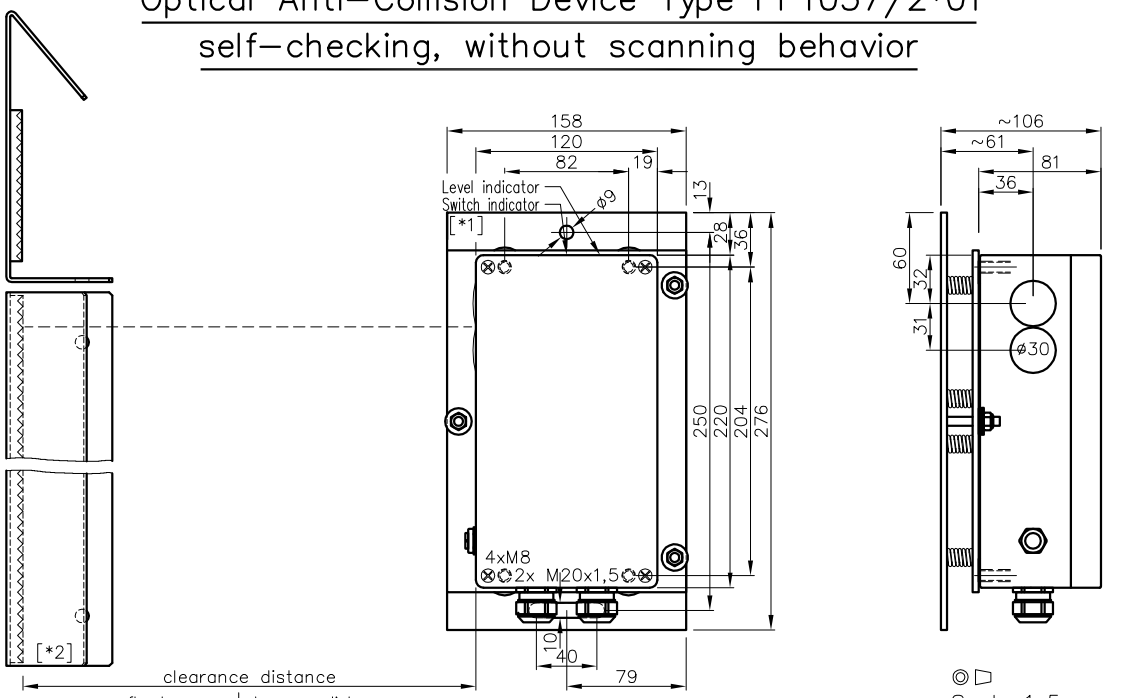

reflector	clearance distance
4R100BL(AF)	1 ≤ L ≤ 25m

Scale 1:5
All dimensions in mm!

1...25m

Optical Anti-Collision Device self-checking, without scanning behavior

PP1037/2*01

Order no.:

5257M01

term.	AC	24VDC
1	L	+24V
2	N	0V

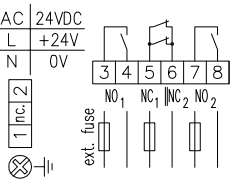

Technical Characteristics:

Housing	Al-Cast
Weight	approx. 2500g without adjustment flange
Protection mode	IP65
Connection	terminal strip
Supply	230VAC/10VA
Output main contact	2x Relay 2xNO, 1xNC, supervised & forceguided
Signal mode	dark switching
Operation mode	Alternating light, dynamic, continually self-testing
Transmitter light	850...880nm, invisible
Access time	approx. 80ms
Switching rate	Relay: 3/s
Tolerance of distance accuracy	≤ 9% (see operating instructions)
Additional tolerance in outdoor applications	8% (see operating instructions)
Switch indicator	2x LED green
Level indicator	4x LED red (DIANA, i)
Steady Light Resist.	>80kLx
Operating Temperature	-25...+60°C

Options:

Housing	Protection roof, ...-PR
Connection	Plug
Supply	115VAC, 24VDC/~350mA
If using cooling PP1038/2*04	water flange, then milled wall, y with second switching point (#5267M04)

Note:

Please refer to the operating instructions (E_52572) for assembly, connecting and adjustment instructions of the light barrier and the corresponding accessories.

Accessories:

Reflector 4R100BL [*2] (#6801)
Reflector anti-fogging version 4R100BLAF (#6801A01)
Adjustment flange JF152S [*1] (#8683)
Cooling water flange KW152 (#8881)

Mounting example:

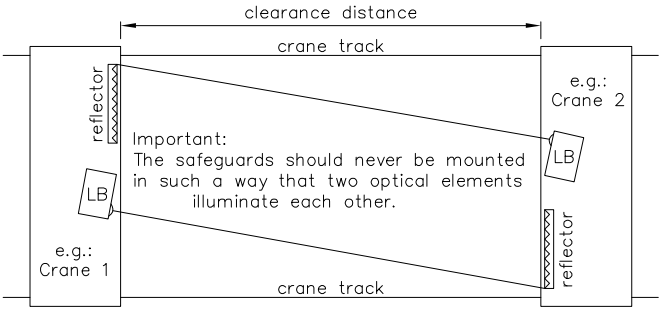

5257M01 DE (21.02.05 mj) (16.09.10 tb) (26.10.15 tb) 04.07.23 TBR
E_ 5257 1 1 (14.04.05 tb) (07.07.14 tb) (09.10.17 tb)
(11.03.97 tb) (27.06.05 tb) (08.12.14 tb) (26.06.18 tb)
(05.01.04 gs) (27.01.10 tb) (27.01.15 tb) (08.10.19 tb)

The design and make of the devices and their electronics are intellectual property of the company "Fotoelektrik Pauly GmbH". Internal circuit diagrams can, for copyright reasons, not be given therefore. Subject to technical alterations. Errors excepted. The reprinting of this data sheet or the copying of extracts from it are allowed only with the approval of the "Fotoelektrik Pauly GmbH" and with an indication of the sources used. Infringements are punishable by law.