PAULY

Fotoelektrik Pauly GmbH & Co. KG, Wahrbrink 6, D-59368 Werne, Telefon 02389/40227-70, Telefax 02389/40227-77, www.pauly-lichtschranken.de

(Infra-)Red-Light Reflex Light Barrier with forced local range

Types JP191-1 and JP192-1

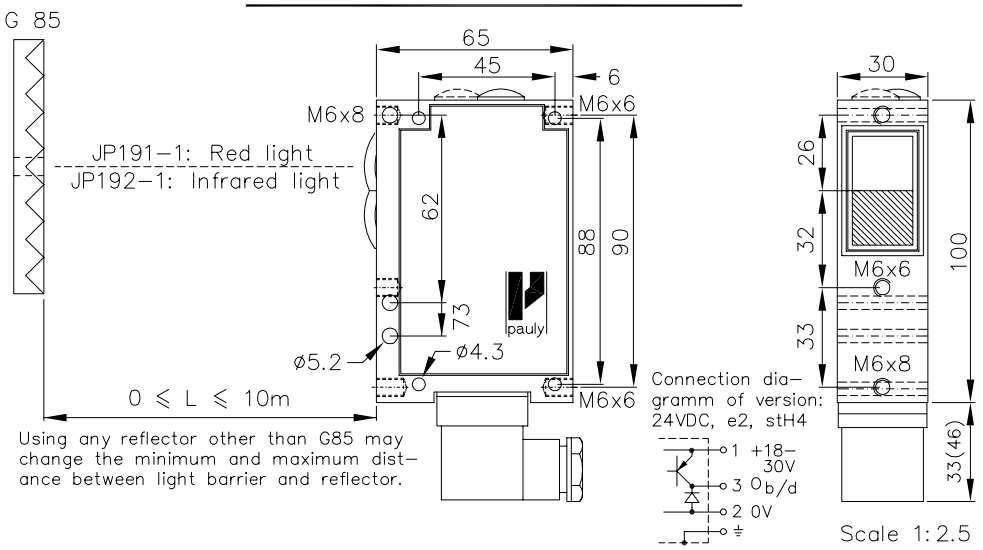

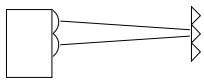

0 – 10m

Reflex Light Barrier with forced local range

JP191-1
JP192-1

Order no.:

1164
1165

Technical characteristics of minimum type:

Housing	Al-Cast
Weight	approx. 350g
Protection mode	IP65
Connection	3+1 pin Plug stH4
Supply	24VDC/40mA without load
Output	pnp 60mA s.c.-prot., e2
Signal mode	bright/dark, selectable
Transmitter light JP191-1:	LED 650nm
JP192-1:	LED 880nm
Steady light resistance	>80kLx
Interference suppress.	Force synchronization
Light beam diameter	approx. 85mm/6m
Access time	<12ms/Switch transition
Switching rate	40/s, Relay: 10/s
Switch indicator	LED
Ambient temperatur	-25...+60°C

Features:

Connection	4 pin Plug stLU4
	4+1 pin Plug stA5
	6+1 pin Plug stA7
	6+1 pin Plug stH7
	3+1 wire No.-Cable K4
	2x3 wire No.-Cable 2K3
Supply	230V, 115V, 42..48V, 24VAC
	24..230VUC
Output	npn 60mA s.c.-prot., e2
	Optocoupler 60V/50mA,e1
	Relay 240VAC/5A, 120W/1200VA, 1xCh
	also: 2xe2/2xe3 or antivalent e4/e5
Access time	"q": <2ms/Switch transition
Switching rate	"q": 300/s, Relay: 10/s
Time delay	0-10s, switching-on-off-delay, separately adjustable, z10
Level indicator	DIANA, i

Heat-protected optical system, pl
If using cooling water flange, then milled wall, y
Testable by connecting a test input to 0V, t
Dynamic time delay, dyn Z
JV19.. (#107..): Pollution warning output
JU19.. (#106..): 'intelligent' Pollution warning output

Accessories:

Reflectors
Diaphragms, Optical filters
Adjustment flange JF19H(1)
Elbow tube adjustment JR19(2&3)
Cooling water flange KW19
Anti heat shield & anti dust tube (K)JT19

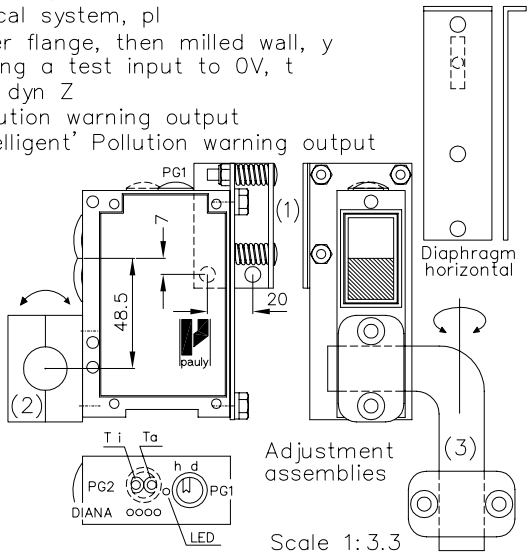

Hints:

Selection of bright/dark switching mode is standard. The selection switch can be reached after removing the blanking screw designated 'PG1'. Bright switching means that the output (here the pnp transistor) is operated when the transmitter light is received by the receiver after being reflected by the reflector. The switch indicator LED (green)for the working contact always lights when the output is energised.
The on- (Ti) and off- (Ta) delay are optional. Turning the controls behind 'PG2' clockwise increases delay times. The delay time range is between approx. 0 and 10 secs. Other delays are available on request.
The level indicator 'DIANA' (DIgital ANAlog indicator) is optional, too. DIANA shows the level approx. 20 to 25 times above the threshold signal. For proper operation of the light barrier it is not necessary to have all DIANA LEDs on!
E_ 166x 1.TXT

1164 DE 18.02.05 mj
E_ 1164 1
(23.11.99 tb)
(13.01.03 gs)

The design and make of the devices and their electronics are intellectual property of the company "Fotoelektrik Pauly GmbH & Co. KG". Internal circuit diagrams can, for copyright reasons, not be given therefore. Subject to technical alterations. Errors excepted. The reprinting of this data sheet or the copying of extracts from it are allowed only with the approval of the "Fotoelektrik Pauly GmbH & Co. KG" and with an indication of the sources used. Infringements are punishable by law.